4100 SERIES
Condensate Pumps - Steel Tank

4100 Series
Duplex Construction
(Shown with optional control panel & isolation valve)

Technical Specifications

Sterlco® 4100 Series Condensate Pumps set new standards of performance. Reliable and efficient, each unit features heavy gauge, 3/16" steel receivers for long operating life.

In addition, 3450 RPM motors assure maximum efficiency while maintaining minimum motor horsepower. Available in a wide range of sizes, these U.S. made pumps have just the right accessories and options to meet your unique needs.

What's more, a nationwide network of stocking distributors means fast, easy, year-round access to pumps and replacement parts.

Features

Standard Features

- Heavy gauge steel receivers
- Simplex or duplex construction
- Bronze fitted centrifugal pumps
- Energy efficient 3450 RPM motors
- Automatic venting
- "Sterl-Seal" ceramic pump seal (250°F)
- Heavy-duty float switch
- Wide range of options and accessories

Simplex Construction

Duplex Construction

Optional Features

- Mechanical and electrical alternators
- Gauge glass
- Thermometer
- Discharge pressure gauges
- Isolation valves
- Special motor construction, such as totally enclosed, washdown duty and explosion proof is available
- Magnetic starters with H-O-A selector switches
- 1750 RPM motors, larger pumping capacities and higher discharge pressures - consult factory
- 120 gallon, custom sized and elevated tanks are available
- Complete NEMA 12 Control Panel

ENGINEERED SOLUTIONS

321 Cityview blvd.,Unit #4
Vaughan, Ontario L4H 3M3
905-832-0909
www.EngineeredSolutionsCan.com

4100 SERIES

Product Features

Motors:
Heavy-duty, ball-bearing, close-coupled pump motors with stainless steel shaft. 3450 RPM for greater efficiency and more economical operation.

Float Switch:
Two-pole, drip proof case, stainless steel float and float rod, double-break silver-to-silver contacts. Float travel adjustment is easy, visible and accessible.

Automatic Venting:
Provides for efficient operation and long life by venting air and flushing seal area.

Large Tanks:
Plenty of capacity for maximum rating of pump. Return inlet is low Occupies a minimum of floor space

Impleller:
Made of brass for long life. Efficient design provides maximum capacity, minimum motor load.

"SterlSeal" Pump seal (A):
Features the ultimate in ceramic technology for exceptionally long life. Because the seal runs on the bronze impeller hub, the motor shaft is literally outside the pump. Consequently, the shaft is not exposed to corrosion by condensate. Rated for temperatures up to 250ºF.

Isolation Valve (B):
Optional on 4100 Series Condensate Pumps. Allows removal of pump without draining the tank.

A

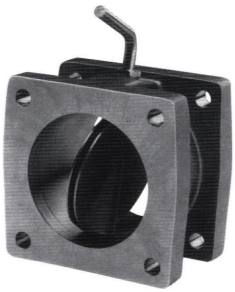

B

Control Panel

Complete NEMA 12 Control Panel (Optional)

- Motor Circuit Protector
- HOA Selector Switch
- External Reset
- Control Circuit Transformer
- Pilot Light (pump running)
- Removable Mounting Plate and Terminal Strip in a Single NEMA 12 Enclosure
- Mounted and Wired with Single Point Power Connection.

ENGINEERED SOLUTIONS

321 Cityview blvd.,Unit #4
Vaughan, Ontario L4H 3M3 905-832-0909
www.EngineeredSolutionsCan.com

Specifications

4100 Series Engineering and Capacity Data

Capacity Sq. Ft. EDR	Discharge Pressure PSI	Pump Capacity, GPM	Motor HP	Rec. Capacity, Gallons	Unit Model Number		Shipping Weight, lbs.	
					Simplex	Duplex	Simplex	Duplex
8,000	20	12	1/3	8	4028G	-	90	-
2,000 4,000 6,000 8,000	20	3 6 9 12	1/3 1/3 1/3 1/3	15	4122-G 4124-G 4126-G 4128-G	4122-GD 4124-GD 4126-GD 4128-GD	125 125 125 125	185 185 185 185
10,000 15,000 20,000	20	15 22.5 30	1/2 1/2 3/4	30	41210-G 41215-G 41220-G	41210-GD 41215-GD 41220-G	190 190 200	240 240 250
25,000 30,000	20	37.5 45	3/4 1	45	41225-J 41230-J	41225-JD 41230-JD	285 285	350 355
40,000	20	60	1-1/2	60	41240-J	41240-JD	335	405
50,000	20	75	2	95	41250-J	41250-JD	385	460
2,000 4,000 6,000 8,000 10,000	30	3 6 9 12 15	1/2 1/2 1/2 1/2 3/4	15	4132-J 4134-J 4136-J 4138-J 41310-J	4132-JD 4134-JD 4136-JD 4138-JD 41310-JD	180 180 180 180 185	250 250 250 250 255
15,000 20,000	30	22.5 30	1 1	30	41315-J 41320-J	41315-JD 41320-JD	230 230	300 300
25,000 30,000	30	37.5 45	1 1-1/2	45	41325-J 41330-J	41325-JD 41330-JD	285 290	350 355
40,000	30	60	2	60	41340-J	41340-JD	340	410
50,000	30	75	3	95	41350-J	41350-JD	395	470
2,000 4,000 6,000 8,000 10,000	40	3 6 9 12 15	1 1 1 1 1	15	4142-J 4144-J 4146-J 4148-J 41410-J	4142-JD 4144-JD 4146-JD 4148-JD 41410-JD	190 190 190 190 190	270 270 270 270 270
15,000 20,000	40	22.5 30	1-1/2 1-1/2	30	41415-J 41420-J	41415-JD 41420-JD	240 240	310 310
25,000 30,000	40	37.5 45	1-1/2 2	45	41425-J 41430-J	41425-JD 41430-JD	290 295	355 360
40,000	40	60	2	60	41440-J	41440-JD	340	410
50,000	40	75	3	95	41450-J	41450-JD	395	470
2,000 4,000 6,000 8,000 10,000	50	3 6 9 12 15	2 2 2 2 2	15	4152-J 4154-J 4156-J 4158-J 41510-J	4152-JD 4154-JD 4156-JD 4158-JD 41510-JD	195 195 195 195 195	275 275 275 275 275
15,000 20,000	50	22.5 30	2 3	30	41515-J 41520-J	41515-JD 41520-JD	245 255	320 330

Sample Specification

Furnish and install, where indicated on plans, a Sterling 4100 Series (simplex or duplex) condensate pump, having a capacity of _____ sq. ft. E.D.R._____ GPM against a discharge pressure of _____ PSI. The receiver shall have a capacity of _____ gallons and be of 3/16" steel construction. Pump(s) shall be of the centrifugal type with two-piece enclosed brass impeller, cast iron housing, high temperature (250ºF) mechanical seal and stainless steel motor shaft. The float switch shall be two-pole with plastic case, stainless steel float and shaft, and double-break silver contacts. A flat perforated brass strainer shall be provided at the inlet to the pump from the tank. The motor(s) shall be vertical, 3450 RPM, _____ phase, _____ volt, 60 cycle, _____ H.P. The complete unit is to be factor

Product Diagrams

G series (simplex)
8 or 15 gallon tank

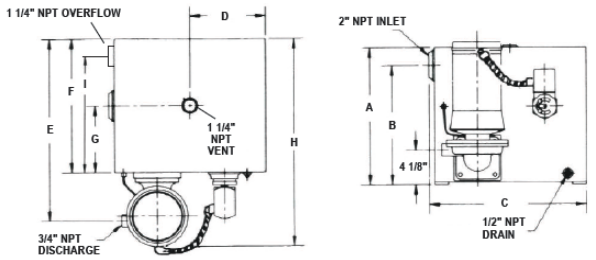

J series (duplex)
15 gallon tank

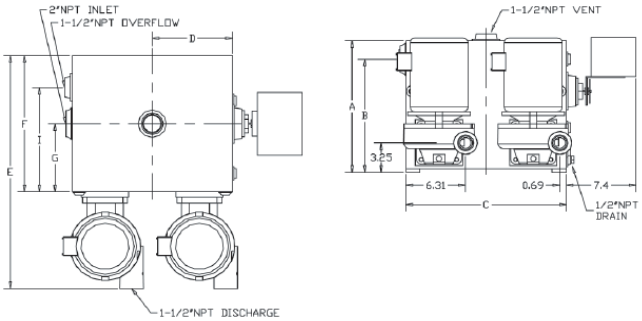

G series (duplex)
15 gallon tank

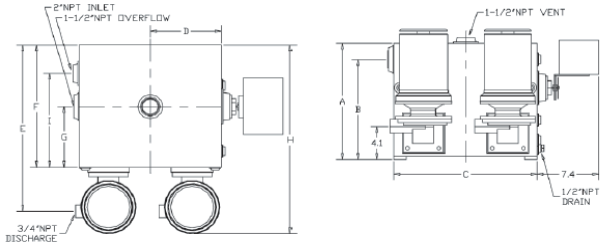

J series (simplex)
15 gallon tank

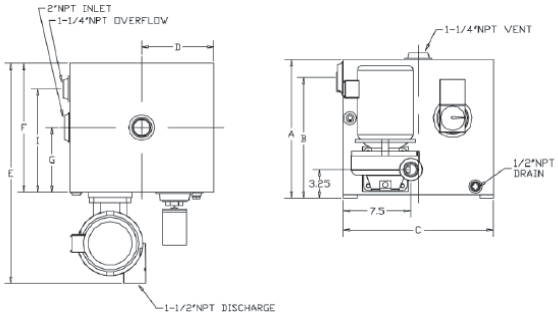

G series
30-120 gallon tanks

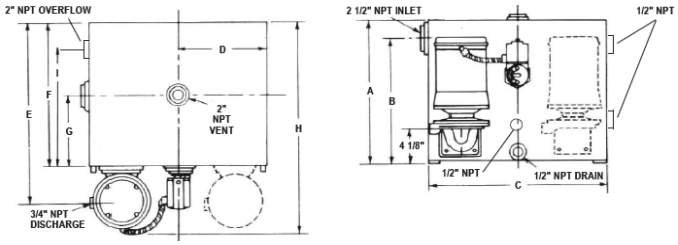

J series
30-120 gallon tanks

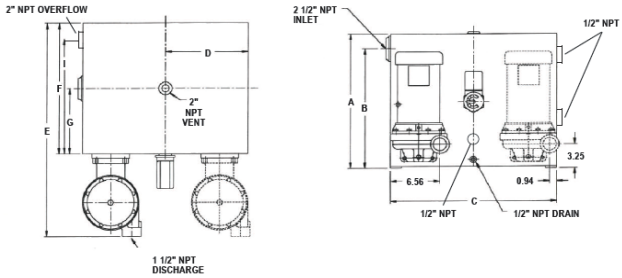

Receiver	A	B	C	D	E	F	G	H	I
8 G	12.50	10.50	12.50	6.25	18.00	12.50	6.25	21.50	10.25
15 G	14.38	12.38	17.00	8.50	20.50	15.00	7.50	23.25	11.50
15 J	14.38	12.38	17.00	8.50	26.31	15.00	7.50		11.50
30 G	18.38	16.12	22.00	11.00	23.50	18.00	9.00	28.00	13.50
30 J	18.38	16.12	22.00	11.00	29.31	18.00	9.00		13.50
45 G	26.38	24.12	22.00	11.00	23.50	18.00	9.00	28.00	13.50
45 J	26.38	24.12	22.00	11.00	29.31	18.00	9.00		13.50
60 G	28.38	26.12	28.00	14.00	23.50	18.00	9.00	28.00	13.50
60 J	28.38	26.12	28.00	14.00	29.31	18.00	9.00		13.50
95 G	28.38	26.12	28.00	14.00	33.50	28.00	14.00	38.00	23.50
95 J	28.38	26.12	28.00	14.00	39.31	28.00	14.00		23.50
120 G	36.38	33.75	28.00	14.00	33.50	28.00	14.00	38.00	23.50
120 J	36.38	33.75	28.00	14.00	39.31	28.00	14.00		23.50